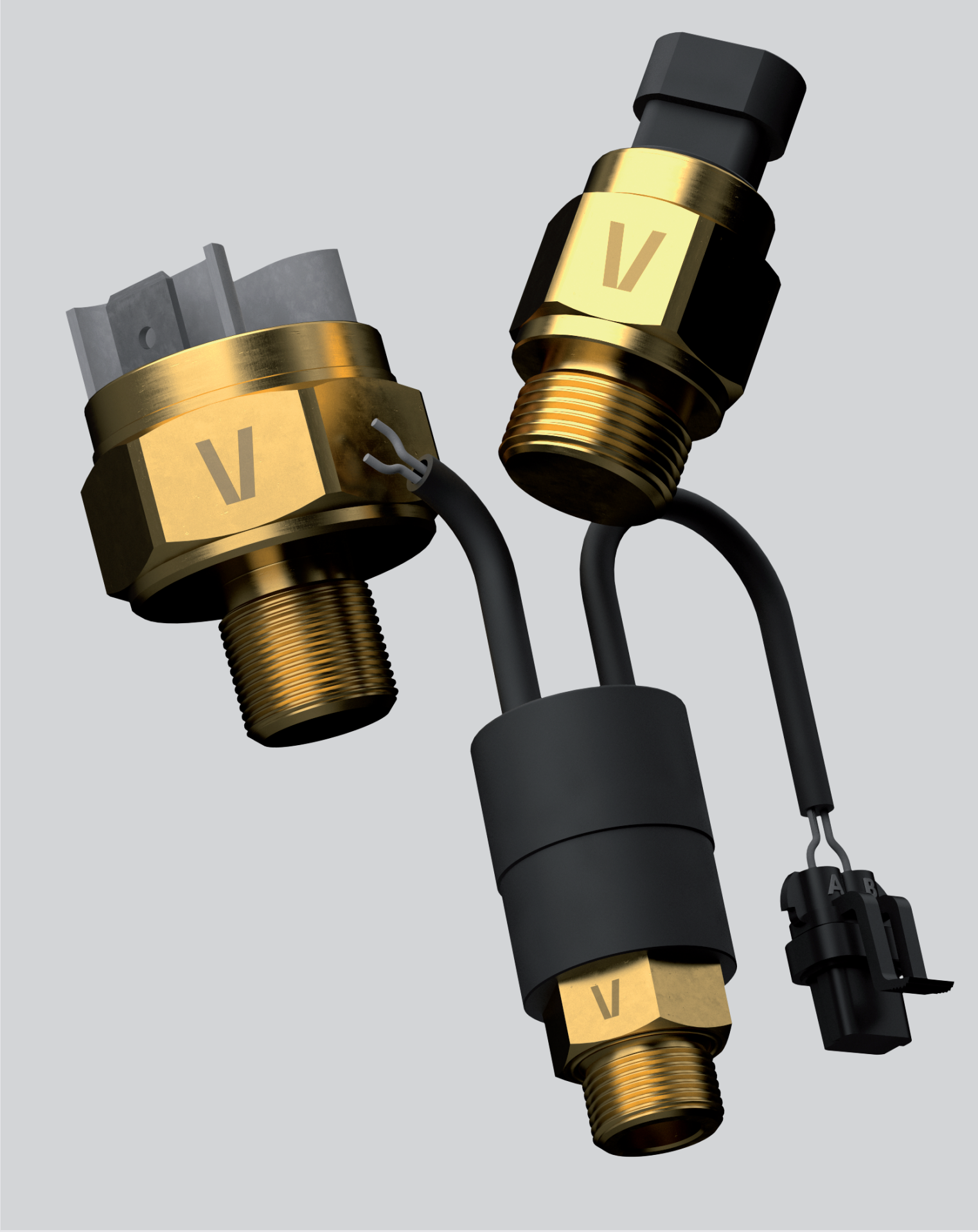

TEMPERATURE SENSOR

VIBOR

TF1

BIMETAL THERMOSTAT
SPST - FASTON
EARTH RETURN

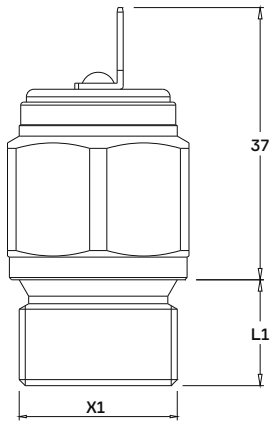

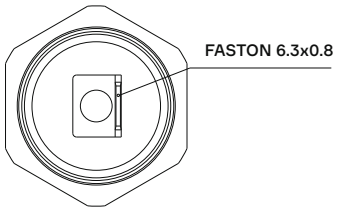

ELECTRICAL CONDITION

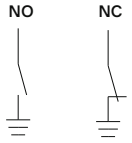

Max Pressure	250 bar	Intervention Tolerance	± 3,5	Tightening Torque	25 Nm
Electrical Load Type	48V / 4A 24V / 6A	Thermal Hysteresis	< 14 °C	Housing Material	Brass Hex 24mm
Fluid Temperature	-40 ÷ +150 °C			Standard Protection Level	.F0 Faston Connection - IP00 * See the attachment caps and connectors

Select specifications for product coding

1. Threads (X1)

09	12	25
1/2" BSPP *L1 13,5 mm*	3/8" BSPP *L1 13,5 mm*	M22x 1,5 *L1 13,5 mm*

2. Switching Temperature

030	040	050	060	070	080	090	100	110	120
30° C	40° C	50° C	60° C	70° C	80° C	90° C	100° C	110° C	120° C

3. Electrical Condition

A	C
Normally Open	Normally Closed

4. Switching

S	D
Rising Setup	Falling Setup

5. Customizations
* See the attachment caps and connectors

.F0	.01	.XX
Faston Connection IP00	Protection Cap KT011 - IP54	Costumized product

TF1	1.	2.	3.	4.	5.

VIBOR

Vibor s.r.l.
Via Grazioli 57
20161 Milan, Italy

www.vibor.it
info@vibor.it
Ph: (+39) 02 66 204 556

Release 01

TF2

BIMETAL THERMOSTAT
SPST - FASTON

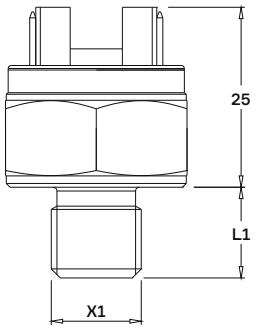

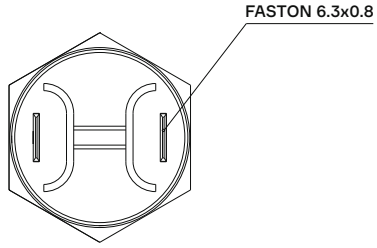

ELECTRICAL CONDITION

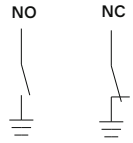

Max Pressure	250 bar	Intervention Tolerance	± 3,5	Tightening Torque	25 Nm
Electrical Load Type	48V / 4A 24V / 6A	Thermal Hysteresis	< 14 °C	Housing Material	Brass Hex 24mm
Fluid Temperature	-40 ÷ +150 °C			Standard Protection Level	.F0 Faston Connection - IP00 * See the attachment caps and connectors

Select specifications for product coding

1. Threads (X1)

09	12	25
1/2" BSPP *L1 13,5 mm*	3/8" BSPP *L1 13,5 mm*	M22x 1,5 *L1 13,5 mm*

2. Switching Temperature

030	040	050	060	070	080	090	100	110	120
30° C	40° C	50° C	60° C	70° C	80° C	90° C	100° C	110° C	120° C

3. Electrical Condition

A	C
Normally Open	Normally Closed

4. Switching

S	D
Rising Setup	Falling Setup

5. Customizations
* See the attachment caps and connectors

.F0	.01	.97	.98	.99	.XX
Faston Connection IP00	Protection Cap KT011 - IP54	Cable L. 250mm Conn. AMP Superseal 1.5 2 vie -IP67	Cable L. 250 mm Conn. Deutsch DT04-2P - IP67	Cable L. 250 mm Conn. Metri-Pack (MP280) - IP67	Costumized product

TF2	1.	2.	3.	4.	5.	6.	7.

VIBOR

Vibor s.r.l.
Via Grazioli 57
20161 Milan, Italy

www.vibor.it
info@vibor.it
Ph:(+39) 02 66 204 556

Release 01

TF3

BIMETAL THERMOSTAT
WIRED : SPST

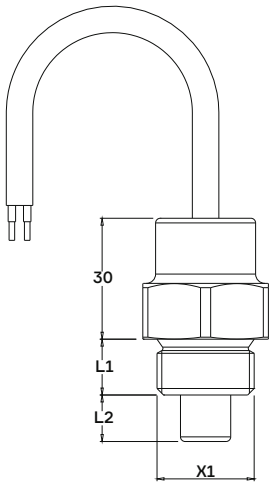

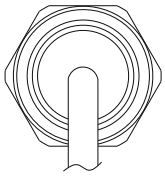

ELECTRICAL CONDITION

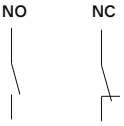

Max Pressure	250 bar	Intervention Tolerance	± 3,5	Tightening Torque	25 Nm
Electrical Load Type	48V / 1A 24V / 2A 250Vac / 1A	Thermal Hysteresis	< 5 °C	Housing Material	Brass Hex 24mm
Fluid Temperature	-40 ÷ +150 °C			Standard Protection Level	.96 Cable 2 x 0,75 - IP67 * See the attachment caps and connectors

Select specifications for product coding

1.	Threads (X1)								09 1/2" BSPP *L1 13,5 mm*	12 3/8" BSPP *L1 13,5 mm*	25 M22x 1,5 *L1 13,5 mm*
2.	Switching Temperature	030 30° C	040 40° C	050 50° C	060 60° C	070 70° C	080 80° C	090 90° C	100 100° C	110 110° C	120 120° C
3.	Electrical Condition									A Normally Open	C Normally Closed
4.	Switching									S Rising Setup	D Falling Setup
5.	Probe Lenght (L2)									1 Probe 15 mm	2 Probe 25,4 mm
6.	Cable Type									F Flying Leads	C Cable 2 x 0,75
7.	Customizations * See the attachment caps and connectors				.96 Cable 2 x 0,75 L. 250 mm - IP67	.97 Cable L. 250mm Conn. AMP Superseal 1.5 2 vie -IP67	.98 Cable L. 250 mm Conn. Deutsch DT04-2P - IP67	.99 Cable L. 250 mm Conn. Metri-Pack (MP280) - IP67	.XX Costumized product		

TF3	1.	2.	3.	4.	5.	6.	7.

VIBOR

Vibor s.r.l.
Via Grazioli 57
20161 Milan, Italy

www.vibor.it
info@vibor.it
Ph:(+39) 02 66 204 556

Release 01

TF4

BIMETAL THERMOSTAT
SPST - DIN CONNECTOR

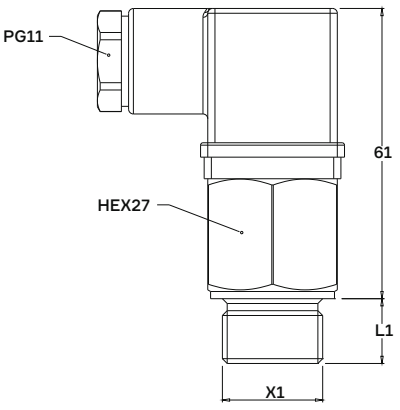

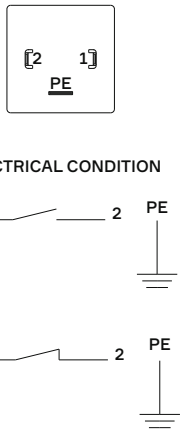

ADJUSTABLE CONNECTOR
DIN43650/A - 360°

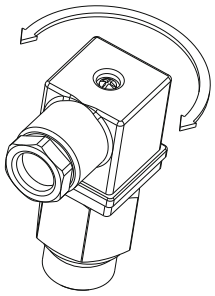

Max Pressure	250 bar	Intervention Tolerance	± 3,5	Tightening Torque	25 Nm
Electrical Load Type	48V / 4A 24V / 6A 250Vac / 1A	Thermal Hysteresis	< 14 °C	Housing Material	Brass Hex 27 mm
Fluid Temperature	-40 ÷ +150 °C			Standard Protection Level	.E0 DIN EN Connector 175301-803-A (DIN43650/A) - IP65 * See the attachment caps and connectors

Select specifications for product coding

1. Threads

09	12	25
1/2" BSPP *L1 13,5 mm*	3/8" BSPP *L1 13,5 mm*	M22x 1,5 *L1 13,5 mm*

2. Switching Temperature

030	040	050	060	070	080	090	100	110	120
30° C	40° C	50° C	60° C	70° C	80° C	90° C	100° C	110° C	120° C

3. Electrical Condition

A	C
Normally Open	Normally Closed

4. Switching

S	D
Rising Setup	Falling Setup

5. Customizations
* See the attachment caps and connectors

.E0	.XX
DIN EN Connector 175301-803-A (DIN43650/A) - IP65	Customized product

TF4	1.	2.	3.	4.	5.

VIBOR

Vibor s.r.l.
Via Grazioli 57
20161 Milan, Italy

www.vibor.it
info@vibor.it
Ph: (+39) 02 66 204 556

Release 01

TF5

BIMETAL THERMOSTAT
SPST - INTEGRATED CONNECTOR

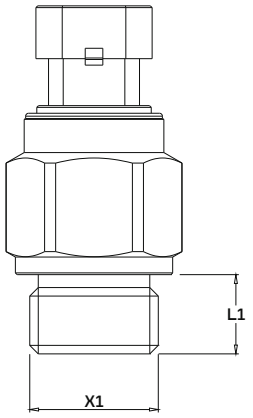

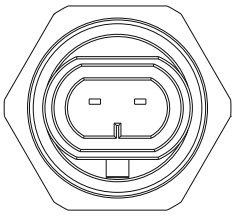

ELECTRICAL CONDITION

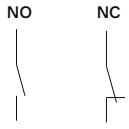

Max Pressure	250 bar	Intervention Tolerance	± 3,5	Tightening Torque	25 Nm
Electrical Load Type	48V / 4A 24V / 6A	Thermal Hysteresis	< 14 °C	Housing Material	Brass Hex 24mm
Fluid Temperature	-40 ÷ +150 °C			Standard Protection Level	IP67 * See the attachment caps and connectors

Select specifications for product coding

1.	Threads (X1)								09 1/2" BSPP *L1 13,5 mm*	12 3/8" BSPP *L1 13,5 mm*	25 M22x 1,5 *L1 13,5 mm*
2.	Switching Temperature	030 30° C	040 40° C	050 50° C	060 60° C	070 70° C	080 80° C	090 90° C	100 100° C	110 110° C	120 120° C
3.	Electrical Condition									A Normally Open	C Normally Closed
4.	Switching									S Rising Setup	D Falling Setup
5.	Customizations * See the attachment caps and connectors								.S0 Connector AMP Superseal 1.5 2 vie - IP67	.D0 Connector Deutsch DT04-2P - IP67	.XX Customized product

TF5	1.	2.	3.	4.	5.

VIBOR

Vibor s.r.l.
Via Grazioli 57
20161 Milan, Italy

www.vibor.it
info@vibor.it
Ph: (+39) 02 66 204 556

Release 01

TRL

ELECTROMECHANICAL THERMOSTAT
SPST
INTEGRATED RELAY

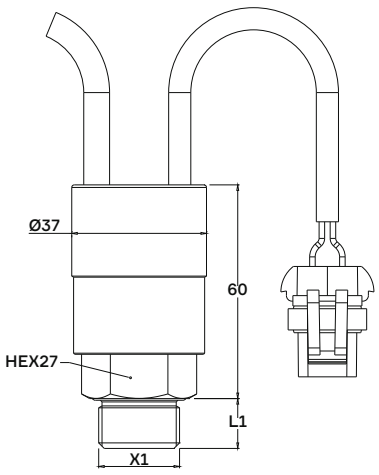

ELECTRICAL CONDITION

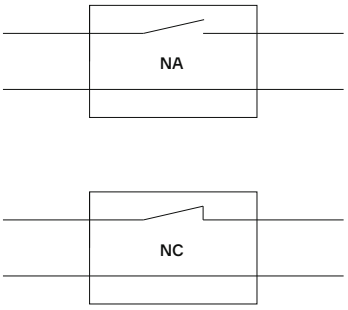

Max Pressure	250 bar	Intervention Tolerance	± 4	Tightening Torque	25 Nm
Electrical Load Date	12V / 30A 24V / 30A	Thermal Hysteresis	< 16 °C	Housing Material	Brass Hex 27mm
Fluid Temperature	-40 ÷ +120 °C			Standard Protection Level	.99 Cable L. 250 mm Metri-Pack Connector (MP280) - IP67 * See the attachment caps and connectors

Select specifications for product coding

1.	Threads (X1)								09 1/2" BSPP *L1 13,5 mm*	12 3/8" BSPP *L1 13,5 mm*	25 M22x 1,5 *L1 13,5 mm*
2.	Switching Temperature	030 30° C	040 40° C	050 50° C	060 60° C	070 70° C	080 80° C	090 90° C	100 100° C	110 110° C	120 120° C
3.	Electrical Condition									A Normally Open	C Normally Closed
4.	Switching									S Rising Setup	D Falling Setup
5.	Electrical Load Type									.12 12V / 30A	.24 24V / 30A
6.	Customizations * See the attachment caps and connectors								.99 Cable L. 250 mm Metri-Pack Connector (MP280) - IP67		.XX Customized Product

TRL	1.	2.	3.	4.	5.	6.

VIBOR

Vibor s.r.l.
Via Grazioli 57
20161 Milan, Italy

www.vibor.it
info@vibor.it
Ph: (+39) 02 66 204 556

Release 01

TS1

SOFT STARTER
ELECTRONIC THERMOSTAT

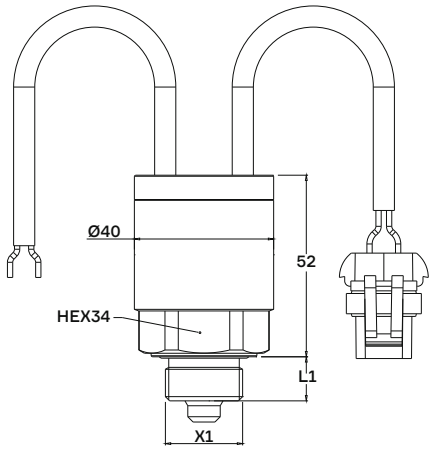

Max Pressure	200 bar	Fluid Temperature	-20 ÷ +80 °C	Housing Material	Brass
Supply Voltage	12÷24 Vdc	Intervention Tolerance	± 3,5	Supply Cable	1,00 m
Max Load	20 A	Tightening Torque	25 Nm	Standard Protection Level	Cable L. 250 mm Metri-Pack Conn. (MP280) - IP67 * See the attachment caps and connectors

Select specifications for product coding

1.	Threads (X1)					09 1/2" BSPP *L1 13,5 mm*	12 3/8" BSPP *L1 13,5 mm*	25 M22x 1,5 *L1 13,5 mm*
2.	Switch-on Temperature (°C)	030 30° C	040 40° C	050 50° C	060 60° C	070 70° C	080 80° C	090 90° C
3.	Switch-off Temperature (°C)	030 30° C	040 40° C	050 50° C	060 60° C	070 70° C	080 80° C	090 90° C
4.	Transition Time (Seconds)					A 15	B 30	C 60
5.	Electrical Condition						A Normally Closed	C Normally Closed
6.	Customization * See the attachment caps and connectors			.97 Cable L. 250mm AMP Superseal Conn. 1.5 2 vie -IP67	.98 Cable L. 250 mm Deutsch Conn. DT04-2P - IP67	.99 Cable L. 250 mm Metri-Pack Conn. (MP280) - IP67		.XX Costumized product

TS1	1.	2.	3.	4.	5.	6.

VIBOR

Vibor s.r.l.
Via Grazioli 57
20161 Milan, Italy

www.vibor.it
info@vibor.it
Ph: (+39) 02 66 204 556

Release 01

TS2

FAN DRIVE TEMPERATURE SENSOR (PROPORTIONAL CONTROL)

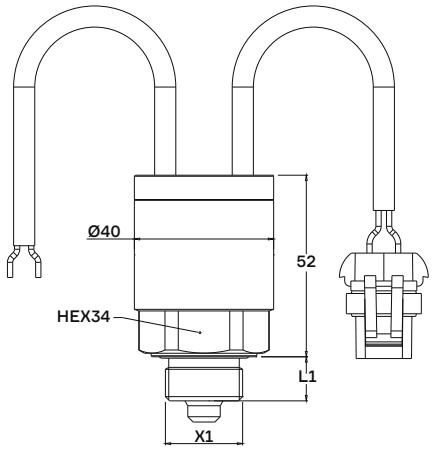

Max Pressure	200 bar	Fluid Temperature	-20 ÷ +80 °C	Housing Material	Brass Hex 34mm
Supply Voltage	12÷24 Vdc	Intervention Tolerance	± 3,5	Supply Cable	1,00 m
Max Load	20 A	Output Signal	PWM	Standard Protection Level	Cable L. 250 mm Metri-Pack Conn. (MP280) - IP67 * See the attachment caps and connectors
		Tightening Torque	25 Nm		

Select specifications for product coding

1.	Threads (X1)					09 1/2" BSPP *L1 13,5 mm*	12 3/8" BSPP *L1 13,5 mm*	25 M22x 1,5 *L1 13,5 mm*
2.	Switch-on Temperature (°C)	030 30° C	040 40° C	050 50° C	060 60° C	070 70° C	080 80° C	090 90° C
3.	100% Output Power Temperature (°C)	030 30° C	040 40° C	050 50° C	060 60° C	070 70° C	080 80° C	090 90° C
4.	Customizations * See the attachment caps and connectors		.97 Cable L. 250mm AMP Superseal Conn. 1.5 2 vie -IP67		.98 Cable L. 250 mm Deutsch Conn. DT04-2P - IP67	.99 Cable L. 250 mm Metri-Pack Conn. (MP280) - IP67		.XX Customized Product

TS2	1.	2.	3.	4.

VIBOR

Vibor s.r.l.
Via Grazioli 57
20161 Milan, Italy

www.vibor.it
info@vibor.it
Ph: (+39) 02 66 204 556

Release 01